United States
Department of
Agriculture

Rural
Utilities
Service

RUS Bulletin
1753E-004

September 1995

RUS Performance Specification for Line Concentrators, RUS Form 397g

UNITED STATES DEPARTMENT OF AGRICULTURE
Rural Utilities Service

BULLETIN 1753E-004 (Form 397g)

SUBJECT: **RUS Performance Specification for Line Concentrators**

TO: All RUS Telecommunications Borrowers
RUS Telecommunications Staff

EFFECTIVE DATE: September 28, 1995

EXPIRATION DATE: Date of change of 7 CFR part 1755.397 by rulemaking

OFFICE OF PRIMARY INTEREST: Central Office Equipment Branch, Telecommunications Standards Division

FILING INSTRUCTIONS: Discard REA Bulletin 345-185, REA Performance Specification for Line Concentrators, REA Form 397g, dated July 29, 1985, and replace with this bulletin. File with 7 CFR 1755 and is available to RUS staff on RUSNET.

PURPOSE: This specification covers RUS general requirements for a digital line concentrator system. This specification enables the line concentrator to operate properly as an integral part of the switched telephone network when connected to physical or carrier derived circuits and central offices meeting RUS specifications and other generally accepted telecommunications practices.

This bulletin is a "user friendly" reformat of the text codified in 7 CFR §1755.397 published at 60 FR 44727, dated August 29, 1995. Every effort has been made to ensure the accuracy of this document. However, in case of discrepancies, the regulation at 7 CFR §1755.397 is the authorized source.

Administrator

9/15/95
Date

TABLE OF CONTENTS

Part I - General Specification

1. General....I-1
2. Types of Requirements....I-2
3. Reliability....I-3
4. System Type Acceptance Tests....I-3
5. Features Required....I-4

6. Subscriber Lines....I-4
6.1 General....I-4
6.2 Dialing....I-4
6.3 Ringing....I-5

7. Traffic....I-5

8. Transmission Requirements....I-6
8.1 General....I-6
8.2 Telephone Transmitter Battery Supply....I-6
8.3 Impedance - Subscriber Loops....I-6
8.4 Battery Noise....I-6
8.5 Stability....I-6
8.6 Return Loss....I-6
8.7 Longitudinal Balance....I-6
8.8 60 Hz Longitudinal Current Immunity....I-7
8.9 Steady Noise....I-8
8.10 Impulse Noise....I-8
8.11 Crosstalk Coupling....I-8
8.12 Digital Error Rate....I-8
8.13 Quantizing Distortion....I-8
8.14 Overload Level....I-8
8.15 Gain Tracking (Linearity)....I-8
8.16 Frequency Response....I-9
8.17 Envelope Delay Distortion....I-9
8.18 Absolute Delay....I-9
8.19 Insertion Loss....I-9
8.20 Detailed Requirements for Direct Digital Connections....I-9

9. Alarms....I-10

10. Electrical Protection....I-10
10.1 Surge Protection....I-10
10.2 Dielectric Strength....I-18
10.3 Insulation Resistance....I-18
10.4 Self-protection....I-18

11. Miscellaneous....I-18
11.1 Interconnect Wire....I-18
11.2 Wire wrapped Terminals....I-19
11.3 Protection Against Corrosion....I-19
11.4 Screws and Bolts....I-19

TABLE OF CONTENTS

11.5 Environmental Requirements.....I-19
11.6 Stenciling.....I-20
11.7 Quantity of Equipment Bays.....I-20
11.8 Radio and Television Interference.....I-20
11.9 Housing.....I-20
11.10 Distributing Frame.....I-20

12. Power Equipment.....I-21
12.1 General.....I-21
12.2 Operating Voltage.....I-21
12.3 Batteries.....I-21
12.4 Charging Equipment.....I-22
12.5 Power Panel.....I-24
12.6 Ringing Equipment.....I-24
12.7 Interrupter Equipment.....I-24
12.8 Special Systems.....I-24

13. Fusing Requirements I-24
13.1 General.....I-24
13.2 Fuses.....I-25

14. Trouble Location and Test I-25
14.1 Equipment.....I-25
14.2 Maintenance System.....I-25

15. Spare Parts.....I-25
16. Drawings and Printed Material.....I-25

FIGURES

Figure 1 - Measuring the Effects of Low Frequency Induction...I-7
Figure 2 - Summary of Eletrical Requirements and Tests.....I-12
Figure 3 - Explanation of Surge Waveshape.....I-13
Figure 4 - Current Surge Test.....I-14
Figure 5 - Explanation of Arrester Response Delay Time.....I-16
Figure 6 - 60 Hz Current Surge Test.....I-17
Figure 7 - Charger Noise Test.....I-23

Part II - Installation and Acceptance

1. Installation and Acceptance.....II-1
1.1 General.....II-1
1.2 Responsibilities of Owner.....II-1
1.3 Responsibilities of Bidder.....II-3
1.4 Information to be Furnished by Bidder.....II-4
1.5 Installation Requirements.....II-5

TABLE OF CONTENTS

1.6 Operational Tests.....II-6
1.7 Acceptance Tests and Data Required.....II-6
1.8 Joint Inspection Requirements.....II-7

Part III - Specification for Line Concentrator Detailed Equipment Requirements

1. General.....III-1
2. Number of Subscriber Lines.....III-2
3. Loop Resistance.....III-2
4. Traffic Data.....III-3
5. Type of Ringing.....III-3
6. Central Office Equipment Interface.....III-3
7. Transmission Facilities.....III-4
8. Power Equipment Requirements.....III-5
9. Remote Terminal.....III-6
10. Alternates.....III-7
11. Explanatory Notes.....III-7

Part IV - Specification For Line Concentrators Detailed Requirements; Bidder Supplied Information

1. General.....IV-1
2. Performance Objectives.....IV-1
3. Equipment QuantitiesDependent on System Design.....IV-2
4. Power Requirements.....IV-2
5. Temperature and Humidity Limitations.....IV-2
6. Explanatory Notes.....IV-3

INDEX:
Specification, Line Concentrator

ABBREVIATIONS

A	Ampere
AC or ac	Alternating Current
ANSI	American National Standards Institute
ASTM	American Society for Testing Materials
CCS	Centum (hundred) Call Seconds
CFR	Code of Federal Regulations
CO	Central Office
COE	Central Office Equipment
CSA	Carrier Serving Area
dB	Decibel
dBm0	Decibel Metallic Referenced to Zero
DC or dc	Direct Current
DP	Dial Pulse
DS1	Digital Signal Level 1 (1.544 Mb/s)
ERL	Echo Return Loss
Hz	Hertz
IEEE	Institute of Electrical and Electronic Engineers
LC	Line Concentrator
MDF	Main Distributing Frame
MF	Multifrequency
PC	Printed Circuit
REA	Rural Electrification Administration
rms	Root Mean Square
RUS	Rural Utilities Service
SRL	Singing Return Loss
V	Volts
VF	Voice Frequency
°C	Degree Centigrade
°F	Degree Fahrenheit

BULLETIN TO CFR PARAGRAPH NUMBER CROSS-REFERENCE

PART I GENERAL SPECIFICATION

1753E-004	1755.397
1.	(a)
1.1	(a)(1)
1.1.1	(a)(1)(i)
1.1.2	(a)(1)(ii)
1.1.3	(a)(1)(iii)
1.2	(a)(2)
1.3	(a)(3)
1.3.1	(a)(3)(i)
1.4	(a)(4)
1.5	(a)(5)
1.5.1	(a)(5)(i)
1.5.2	(a)(5)(ii)
1.5.3	(a)(5)(iii)
1.6	(a)(6)
1.7	(a)(7)
1.7.1	(a)(7)(i)
1.8	(a)(8)
1.8.1	(a)(8(i)
2.	(b)
2.1	(b)(1)
2.2	(b)(2)
2.3	(b)(3)
2.4	(b)(4)
2.5	(b)(5)
2.6	(b)(6)
2.7	(b)(7)
3.	(c)
3.1	(c)(1)
3.2	(c)(2)
4.	(d)
4.1	(d)(1)
5.	(e)
5.1	(e)(1)
6.	(f)
6.1	(f)(1)
6.1.1	(f)(1)(i)
6.1.2	(f)(1)(ii)
6.2	(f)(2)
6.2.1	(f)(2)(i)
6.2.2	(f)(2)(ii)
6.2.3	(f)(2)(iii)

1753E-004	1755.397
6.3	(f)(3)
6.3.1	(f)(3)(i)
6.3.2	(f)(3)(ii)
6.3.3	(f)(3)(iii)
7.	(g)
7.1	(g)(1)
7.1.1	(g)(1)(i)
7.1.2	(g)(1)(ii)
7.2	(g)(2)
7.3	(g)(3)
8.	(h)
8.1	(h)(1)
8.2	(h)(2)
8.3	(h)(3)
8.4	(h)(4)
8.5	(h)(5)
8.6	(h)(6)
8.7	(h)(7)
8.8	(h)(8)
8.9	(h)(9)
8.10	(h)(10)
8.11	(h)(11)
8.12	(h)(12)
8.13	(h)(13)
8.13.1	(h)(13)(i)
8.13.2	(h)(13)(ii)
8.14	(h)(14)
8.15	(h)(15)
8.16	(h)(16)
8.17	(h)(17)
8.18	(h)(18)
8.19	(h)(19)
8.20	(h)(20)
8.20.1	(h)(20)(i)
8.20.2	(h)(20)(ii)
8.20.3	(h)(20)(iii)
8.20.4	(h)(20)(iv)
8.20.4.1	(h)(20)(iv)(A)
8.20.4.2	(h)(20)(iv)(B)
8.20.4.3	(h)(20)(iv)(C)
9.	(i)
9.1	(i)(1)

1753E-004	1755.397
10.	(j)
10.1	(j)(1)
10.1.1	(j)(1)(i)
10.1.2	(j)(1)(ii)
10.1.3	(j)(1)(iii)
10.1.3.1	(j)(1)(iii)(A)
10.1.3.2	(j)(1)(iii)(B)
10.1.3.3	(j)(1)(iii)(C)
10.1.3.4	(j)(1)(iii)(D)
10.1.3.5	(j)(1)(iii)(E)
10.1.4	(j)(1)(iv)
10.1.4.1	(j)(1)(iv)(A)
10.1.4.2	(j)(1)(iv)(B)
10.1.4.3	(j)(1)(iv)(C)
10.1.4.4	(j)(1)(iv)(D)
10.1.4.5	(j)(1)(iv)(E)
10.1.5	(j)(1)(v)
10.1.6	(j)(1)(vi)
10.1.6.1	(j)(1)(vi)(A)
10.1.6.2	(j)(1)(vi)(B)
10.1.6.3	(j)(1)(vi)(C)
10.1.6.4	(j)(1)(vi)(D)
10.2	(j)(2)
10.2.1	(j)(2)(i)
10.2.2	(j)(2)(ii)
10.3	(j)(3)
10.4	(j)(4)
10.4.1	(j)(4)(i)
10.4.2	(j)(4)(ii)
10.4.3	(j)(4)(iii)
11.	(k)
11.1	(k)(1)
11.2	(k)(2)
11.2.1	(k)(2)(i)
11.2.2	(k)(2)(ii)
11.2.3	(k)(2)(iii)
11.2.4	(k)(2)(iv)
11.3	(k)(3)
11.4	(k)(4)
11.5	(k)(5)
11.5.1	(k)(5)(i)
11.5.2	(k)(5)(ii)
11.5.2.1	(k)(5)(ii)(A)
11.5.2.2	(k)(5)(ii)(B)
11.6	(k)(6)
11.7	(k)(7)
11.8	(k)(8)
11.9	(k)(9)
11.9.1	(k)(9)(i)

1753E-004	1755.397
11.10	(k)(10)
11.10.1	(k)(10)(i)
11.10.2	(k)(10)(ii)
11.10.3	(k)(10)(iii)
11.10.4	(k)(10)(iv)
11.10.5	(k)(10)(v)
11.10.6	(k)(10)(vi)
11.10.7	(k)(10)(vii)
11.10.8	(k)(10)(viii)
12.	(l)
12.1	(l)(1)
12.2	(l)(2)
12.2.1	(l)(2)(i)
12.2.2	(l)(2)(ii)
12.2.3	(l)(2)(iii)
12.3	(l)(3)
12.3.1	(l)(3)(i)
12.3.2	(l)(3)(ii)
12.3.3	(l)(3)(iii)
12.3.4	(l)(3)(iv)
12.4	(l)(4)
12.4.1	(l)(4)(i)
12.4.2	(l)(4)(ii)
12.4.3	(l)(4)(iii)
12.4.4	(l)(4)(iv)
12.4.5	(l)(4)(v)
12.4.6	(l)(4)(vi)
12.4.7	(l)(4)(vii)
12.5	(l)(5)
12.5.1	(l)(5)(i)
12.5.2	(l)(5)(ii)
12.5.3	(l)(5)(iii)
12.6	(l)(6)
12.7	(l)(7)
12.8	(l)(8)
13.	(m)
13.1	(m)(1)
13.1.1	(m)(1)(i)
13.1.2	(m)(1)(ii)
13.2	(m)(2)
14.	(n)
14.1	(n)(1)
14.1.1	(n)(1)(i)
14.1.2	(n)(1)(i)
14.2	(n)(2)
14.2.1	(n)(2)(i)
14.2.2	(n)(2)(ii)

1753E-004	1755.397	1753E-004	1755.397
15.	(o)	16.3	(p)(3)
15.1	(o)(1)	16.3.1	(p)(3)(i)
		16.3.2	(p)(3)(ii)
16.	(p)	16.3.3	(p)(3)(iii)
16.1	(p)(1)	16.3.4	(p)(3)(iv)
16.2	(p)(2)	16.3.5	(p)(3)(v)
16.2.1	(p)(2)(i)	16.3.6	(p)(3)(vi)
16.2.2	(p)(2)(ii)	16.3.7	(p)(3)(vii)
16.2.3	(p)(2)(iii)	16.3.8	(p)(3)(viii)
16.2.4	(p)(2)(iv)	16.4	(p)(4)

BULLETIN TO CFR PARAGRAPH NUMBER CROSS-REFERENCE

PART II INSTALLATION

1753E-004	1755.397	1753E-004	1755.397
1.	(q)	1.3.9	(q)(3)(ix)
1.1	(q)(1)	1.3.10	(q)(3)(x)
1.2	(q)(2)	1.3.11	(q)(3)(xi)
1.2.1	(q)(2)(i)	1.3.12	(q)(3)(xii)
1.2.2	(q)(2)(ii)	1.3.13	(q)(3)(xiii)
1.2.3	(q)(2)(iii)	1.3.14	(q)(3)(xiv)
1.2.4	(q)(2)(iv)	1.3.15	(q)(3)(xv)
1.2.5	(q)(2)(v)	1.3.16	(q)(3)(xvi)
1.2.6	(q)(2)(vi)	1.3.17	(q)(3)(xvii)
1.2.7	(q)(2)(vii)	1.3.18	(q)(3)(xviii)
1.2.8	(q)(2)(viii)	1.3.19	(q)(3)(xix)
1.2.9	(q)(2)(ix)	1.3.20	(q)(3)(xx)
1.2.10	(q)(2)(x)	1.3.21	(q)(3)(xxi)
1.2.11	(q)(2)(xi)	1.4	(q)(4)
1.2.12	(q)(2)(xii)	1.4.1	(q)(4)(i)
1.2.13	(q)(2)(xiii)	1.4.2	(q)(4)(ii)
1.2.14	(q)(2)(xiv)	1.4.3	(q)(4)(iii)
1.2.15	(q)(2)(xv)	1.4.4	(q)(4)(iv)
1.2.16	(q)(2)(xvi)	1.4.5	(q)(4)(v)
1.2.17	(q)(2)(xvii)	1.4.6	(q)(4)(vi)
1.2.18	(q)(2)(xviii)	1.4.7	(q)(4)(vii)
1.2.19	(q)(2)(xix)	1.4.8	(q)(4)(viii)
1.2.20	(q)(2)(xx)	1.5	(q)(5)
1.3	(q)(3)	1.5.1	(q)(5)(i)
1.3.1	(q)(3)(i)	1.5.2	(q)(5)(ii)
1.3.2	(q)(3)(ii)	1.5.3	(q)(5)(iii)
1.3.3	(q)(3)(iii)	1.5.3.1	(q)(5)(iii)(A)
1.3.4	(q)(3)(iv)	1.5.3.2	(q)(5)(iii)(B)
1.3.5	(q)(3)(v)	1.5.3.3	(q)(5)(iii)(C)
1.3.6	(q)(3)(vi)	1.5.3.4	(q)(5)(iii)(D)
1.3.7	(q)(3)(vii)	1.6	(q)(6)
1.3.8	(q)(3)(viii)	1.6.1	(q)(6)(i)

1753E-004	1755.397	1753E-004	1755.397
1.6.2	(q)(6)(ii)	1.7.1.4	(q)(7)(i)(D)
1.6.3	(q)(6)(iii)	1.7.2	(q)(7)(ii)
1.6.4	(q)(6)(iv)	1.7.3	(q)(7)(iii)
1.6.5	(q)(6)(v)	1.8	(q)(8)
1.7	(q)(7)	1.8.1	(q)(8)(i)
1.7.1	(q)(7)(i)	1.8.1.1	(q)(8)(i)(A)
1.7.1.1	(q)(7)(i)(A)	1.8.1.2	(q)(8)(i)(B)
1.7.1.2	(q)(7)(i)(B)	1.8.1.3	(q)(8)(i)(C)
1.7.1.3	(q)(7)(i)(C)	1.8.2	(q)(8)(ii)

Parts III and IV of Bulletin 1753E-004 and Appendices A and B of 7 CFR 1755.397 are numbered identically.

United States
Department of
Agriculture

Rural
Utilities
Service

RUS Bulletin
1753E-004

September 1995

RUS Performance Specification for Line Concentrators, RUS Form 397g

Part I

General Specifications

The information and recordkeeping requirements contained in this bulletin have been approved by OMB under control number 0572-0059.

PART I

GENERAL SPECIFICATION

1. GENERAL

1.1 This bulletin covers general requirements for a line concentrator (LC) system. This system shall operate in accordance with the manufacturer's specifications. Reliability shall be of prime importance in the design, manufacture and installation of the equipment. The equipment shall automatically provide for:

1.1.1 Terminating subscriber lines at a location remote from the serving central office;

1.1.2 Concentrating the subscriber lines over a few transmission and supervisory paths to the serving central office; and

1.1.3 Terminating the lines at the central office without loss of individual identity. A subscriber connected to a line concentrator shall be capable of having essentially the same services as a subscriber connected directly to the central office equipment (COE). Intra-unit calling among subscribers connected to the concentrator may be provided, but is not required.

1.2 Industry standards, or portions thereof, referred to in this specification are incorporated by reference by RUS. This incorporation by reference was approved by the Director of the Federal Register in accordance with 5 U.S.C. 552 (a) and 1 CFR part 51. Copies of these standards are available for inspection during normal business hours at the Office of the Federal Register, 800 North Capitol Street, NW., suite 700, Washington, DC.

1.3 ANSI standards are available from ANSI Inc., 11 West 42nd Street, 13th floor, New York, NY 10036, Telephone (212) 642-4900.

1.3.1 ANSI Standard S1.4-1983, Specification for Sound Level Meters, including Amendment S1.4A-1985.

1.4 ASTM Specification B33-91, Standard Specifications for Tinned Soft or Annealed Copper Wire for Electrical Purposes.

1.5 Bell Communications Research (Bellcore) standards are available from Bellcore Customer Service, 60 New England Avenue, Piscataway, NJ 08854, telephone 1-800-521-2673.

1.5.1 TR-TSY-000008, Issue 2, August 1987, Digital Interface between the SLC 96 Digital Loop Carrier System and a Local Digital Switch.

1.5.2 Bell Communications Research (Bellcore) document TR-TSY-000057, Issue 1, April 1987, including Revision 1, November 1988, Functional Criteria for Digital Loop Carrier Systems.

1.5.3 Bell Communications Research (Bellcore) Document TR-NWT-000303, Issue 2, December 1992, including Revision 1, December 1993, Integrated Digital Loop Carrier System Generic Requirements, Objectives, and Interface.

1.6 Federal Standard H28, Screw-Thread Standards for Federal Services, March 31, 1978, including Change Notice 1, May 28, 1986; Change Notice 2, January 20, 1989; and Change Notice 3, March 12, 1990. Copies may be obtained from the General Services Administration, Specification Section, 490 East L'Enfant Plaza SW, Washington, DC 20407, telephone 202-755-0325

1.7 IEEE standards are available from IEEE Service Center, 445 Hoes Lane, P. O. Box 1331, Piscataway, NJ 08854, telephone 1-800-521-2673.

1.7.1 IEEE Standard 455-1985, Standard Test Procedure for Measuring Longitudinal Balance of Telephone Equipment Operating in the Voice Band.

1.8 RUS standards are available from Publications and Directives Management Branch, Administrative Services Division, Rural Utilities Service, Ag Box 1533, South Building, U.S. Department of Agriculture, Washington, DC 20250-1533.

1.8.1 RUS Bulletin 345-50, PE-60 (Sept 1979), RUS Specification for Trunk Carrier Systems, is incorporated by reference at 7 CFR 1755.97.

2. TYPES OF REQUIREMENTS

2.1 Unless otherwise indicated, the requirements listed in this bulletin are considered to be fixed requirements.

2.2 The concentrator system shall communicate with standard T1 digital transmission format at a minimum between the concentrator and central office terminals. Analog conversion functions at remote and central office terminals shall be capable of being eliminated to accomodate end-to-end digital transmission.

2.3 The LC shall operate properly as an integral part of the telephone network when connected to physical or carrier derived circuits and central offices meeting RUS specifications and other generally accepted telecommunications practices, such as Bellcore documents TR-NWT-000303, Integrated Digital Loop Carrier System Generic Requirements, Objectives, and Interface; TR-TSY-000008, Digital Interface between the SLC 96 Digital Loop Carrier System

and a Local Digital Switch; and TR-TSY-000057, Functional Criteria for Digital Loop Carrier Systems.

2.4 For RUS acceptance consideration of a LC, the manufacturer must certify and demonstrate that all requirements specified in this bulletin are available and in compliance with this bulletin

2.5 Certain requirements are included in this bulletin for features which may not be needed for every application. Such features are identifiable by the inclusion in the requirements of some such phrase as "when specified by the owner" or "as specified by the owner." In some cases where an optional feature will not be required by an owner, either now or in the future, a system which does not provide this feature shall be considered to be in compliance with the specification for the specific installation under consideration, but not in compliance with the entire specification.

2.6 The owner may properly request bids from any supplier of an RUS accepted LC whose system provides all the features which will be required for a specific installation.

2.7 When required by the owner, the supplier shall state compliance to the Carrier Serving Area (CSA) requirements, as stated in Bell Communications Research (Bellcore) Standard TR-TSY-000057, Functional Criteria for Digital Loop Carrier Systems.

3. RELIABILITY

3.1 The failure rate of printed circuit boards shall not exceed an average of 2.0 percent per month of all equipped cards in all system terminals during the first 3 months after cutover, and shall not exceed an average of 1.0 percent per month of all equipped cards in all system terminals during the second 3-month period. The failure rate for the equipment shall be less than 0.5 percent per month of all equipped cards in all system terminals after 6 months. A failure is considered to be the failure of a component on the PC board which requires it to be repaired or replaced.

3.2 The line concentrator terminal units shall be designed such that there will be no more than 4 hours of total outages in 20 years.

4. SYSTEM TYPE ACCEPTANCE TESTS

4.1 General test results will be required on each system type. Any system provided in accordance with this bulletin shall be capable of meeting any requirement in this bulletin on a spot-check basis.

5. FEATURES REQUIRED

5.1 The network control equipment and peripheral equipment shall be comprised of solid-state and integrated circuitry components as far as practical and in keeping with the state-of-the-art and economics of the subject system.

6. SUBSCRIBER LINES

6.1 General

6.1.1 The remote LC units shall operate satisfactorily with subscriber lines which meet all of the conditions under the bidder's specifications and all the requirements of this bulletin. This bulletin recognizes that the loop limit of the line concentrator is dependent upon the transmission facility between the LC central office termination and the LC remote unit. When voice frequency (physical) circuits are used, the loop limit from the COE to the subscriber shall be 1900 ohms (including the telephone set). When electronically derived circuits (carrier, lightwave, etc.) are used, the loop limits of the electronic system will control. The bidder shall identify the loop limits of the equipment to be supplied.

6.1.2 There should be provisions for such types of lines as ground start, loop start, regular subscriber, pay stations, etc.

6.2 Dialing

6.2.1 General: The line concentrator remote and central office terminal equipment shall satisfactorily transmit dialing information when used with subscriber dials having a speed of operation between 8 and 12 dial pulses per second and a break period of 55 to 65 % of the total signaling period.

6.2.2 Subscriber Dial Interdigital Time: The remote and central office LC equipment shall permit satisfactory telecommunications operation when used with subscriber rotary dial interdigital times of 200 milliseconds minimum, and pushbutton dialing with 50 milliseconds minimum.

6.2.3 Subscriber Line Pushbutton Dialing Frequencies: The frequency pairs assigned for pushbutton dialing when provided by the central office shall be as listed in this paragraph 6.2.3, with an allowable variation of ± 1.5 percent:

Low Group Frequencies (Hz)	High Group Frequencies (Hz)			
	1209	1336	1477	1633
697	1	2	3	Spare
770	4	5	6	Spare
852	7	8	9	Spare
941	*	0	#	Spare

6.3 Ringing

6.3.1 When LC ringing is generated at the remote end, it shall be automatic and intermittent and shall be cut off from the called line upon removal of the handset at the called station during either the ringing or silent period.

6.3.2 When ringing generators are provided in the LC on an ancillary basis, they shall be selected from RUS Informational Publication 344-2 "List of Materials Acceptable for Use on Telecommunications Systems of RUS Borrowers."

6.3.3 Where ringing is generated at the remote end, the ringing system shall provide sufficient ringing on a bridged basis over the voltage and temperature limits of this specification and over subscriber loops within the limits stated by the manufacturer. The manufacturer shall state the minimum number (not less than two) of main station ringers that can be used for each ringing option available.

7. TRAFFIC

7.1 General

7.1.1 The minimum grade of service for traffic in the line concentrator shall be B=.005 using the Traffic Table, based on the Erlang Lost-Calls-Cleared Formula. Required grade of service, traffic assumptions and calculations for the particular application being implemented shall be supplied by the bidder.

7.1.2 Service to customers served by a traffic sensitive LC should not be noticeably different than the service to customers served by the dedicated physical pairs from the central office so that uniform grade of service will be provided to all customers in any class of service. Reference document §1755.522, (p)(1)(i), RUS General Specification for Digital Stored Program Controlled Central Office Equipment.

7.2 Traffic and Plant Registers: Traffic measurements consist of three types - peg count, usage, and congestion. A peg count register scores one count per call attempt per circuit group such as trunks, digit receivers, senders, etc. Usage counters measure the traffic density in networks, trunks and other circuit groups. Congestion registers score the number of calls which fail to find an idle circuit in a trunk group or to find an idle path through the switching network when attempting to connect two given end points. These conditions constitute "network blocking."

7.3 When required, traffic data will be stored in electronic storage registers or a block of memory consisting of one or more traffic counters for each item to be measured. The bidder shall indicate what registers are to be supplied, their purpose and the

means for displaying the information locally (or at a remote location when available).

8. TRANSMISSION REQUIREMENTS

8.1 General: Unless otherwise stated, the requirements in paragraphs 8.2 through 8.20 of this bulletin are specified in terms of analog measurements made from Main Distributing Frame (MDF) terminals to MDF terminals excluding cabling loss.

8.2 Telephone Transmitter Battery Supply: A minimum of 20 milliamperes, dc, shall be provided for the transmitter of the telephone set at the subscriber station under all loop conditions specified by the bidder. The telephone set is assumed to have a resistance of 200 ohms.

8.3 Impedance - Subscriber Loops: For the purpose of this bulletin, the input impedance of all subscriber loops served by the equipment is arbitrarily considered to be 900 ohms in series with 2.16 microfarad capacitor at voice frequencies.

8.4 Battery Noise: Noise across the remote terminal battery at power panel distribution bus terminals shall not exceed 35 dBrnC during the specified busy hour.

8.5 Stability: The long-term allowable variation in loss through the line concentrator system shall be ± 0.5 dB from the loss specified by the bidder.

8.6 Return Loss: The specified return loss values are determined by the service and type of port at the measuring end. Two-wire ports are measured at 900 ohms in series with 2.16 microfarads, and 4-wire ports are measured at 600 ohms resistive. When other balance networks are supplied, test equipment arranged for operation with the supplied network(s) may be used. The requirement given shall meet the following cited values on each balance network available in the system:

Line-to-Line or Line-to-Trunk (2-Wire)
Echo Return Loss (ERL) - 18 dB, Minimum
Singing Return Loss (SRL) - Low - 15 dB, Minimum
Singing Return Loss (SRL) - High - 18 dB, Minimum

8.7 Longitudinal Balance: The minimum longitudinal balance, with dc loop currents between 20 to 70 mA, shall be 60 dB at all frequencies between 60 and 2000 Hz, 55 dB at 2700 Hz and 50 dB at 3400 Hz. The method of measurement shall be as specified in the IEEE standard #455, "Standard Testing Procedure for Measuring Longitudinal Balance of Telephone Equipment Operating in the Voice Band." Source voltage level shall be 10 volts root mean square (rms) where conversation battery feed originates at the remote end.

8.8 <u>60 Hz Longitudinal Current Immunity</u>: The LC 60 Hz longitudinal current immunity shall be measured in accordance with Figure 1 of this bulletin. Under test conditions cited on Figure 1 of this bulletin, the system noise shall be 23 dBrnC or less.

Figure 1

Measuring the Effects of Low Frequency Induction

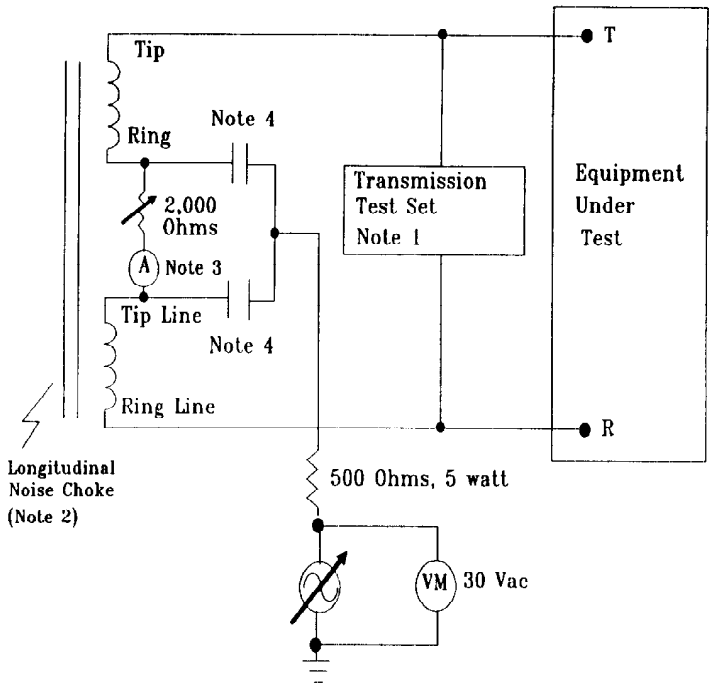

Notes:

1. Wilcom T194C or Equivalent (900 ohm termination, C-message weighting, hold coil off)
2. SNC Noise Choke 35 W, or equivalent
3. Test at 0.020 Adc and 0.070 Adc
4. 2 ± 0.001 microfarad, 150 Vdc

8.9 **Steady Noise (Idle Channel at 900 Ohm Impedance):** Steady noise: Measure on terminated call. Noise measurements shall comply with the following:

Maximum - 23 dBrnC0
Average - 18 dBrnC0 or Less
3KHz Flat - Less than 35 dBrnO as an Objective

8.10 **Impulse Noise:** LC central office terminal equipment shall have an impulse noise limit of not more than five counts exceeding 54 dBrnC0 voice band weighted in a 5-minute period on six such measurements made during the busy hour. A WILCOM T-194C Transmission Test Set, or equivalent, should be used for the measurements. The measurement shall be made by establishing a normal connection from the noise counter through the switching equipment in its off-hook condition to a quiet termination of 900 ohms impedance. Office battery and signaling circuit wiring shall be suitably segregated from voice and carrier circuit wiring, and frame talking battery filters provided, if and as required, in order to meet these impulse noise limits.

8.11 **Crosstalk Coupling:** Worst case equal level crosstalk shall be 65 dB minimum in the range 200 to 3400 Hz. This shall be measured between any two paths through the system by connecting a 0 dBm0 level tone to the disturbing pair.

8.12 **Digital Error Rate:** The digital line concentrator shall not introduce more than one error in 10^8 bits averaged over a 5-minute period, excluding the least significant bit.

8.13 **Quantizing Distortion**

8.13.1 The system shall meet the following requirements:

Input Level (dBm0) 1004 or 1020 Hz	Minimum Signal to Distortion With C-Message Weighting
0 to -30	33 dB
-30 to -40	27 dB
-40 to -45	22 dB

8.13.2 Due to possible loss of the least significant bit on direct digital connections, a signal to distortion degradation of up to 2 dB may be allowed where adequately justified by the bidder.

8.14 **Overload Level:** The overload level shall be +3 dBm0.

8.15 **Gain Tracking (Linearity)** shall meet the following requirements:

Input Signal Level[1]	Maximum Gain Deviation
+3 to -37 dBm0	± 0.5 dB
-37 to -50 dBm0	± 1 dB

[1] 1004 Hz reference at 0 dBm0.

8.16 **Frequency Response (Loss Relative to 1004 Hz)** for line-to-line (via trunk group or intra-link) connections shall meet the following requirements:

Frequency (Hz)	Loss at 0 dBm0 Input[1]
60	20 dB Min.[2]
300	-1 to +3 dB
600 to 2400	±1 dB
3400	-1 to +3 dB

[1] (-) means less loss and (+) means more loss
[2] Transmit End

8.17 **Envelope Delay Distortion:** On any properly established connection, the envelope delay distortion shall not exceed the following limits:

Frequency (Hz)	Microseconds
1000 to 2600	190
800 to 2800	350
600 to 3000	500
400 to 3200	700

8.18 **Absolute Delay:** The absolute one-way delay through the line concentrator, excluding delays associated with the central office switching equipment, shall not exceed 1000 microseconds analog-to-analog measured at 1800 Hz.

8.19 **Insertion Loss:** The insertion loss in both directions of transmission at 1004 Hz shall be included in the insertion loss requirements for the connected COE switch and shall not increase the overall losses through the combined equipment beyond the values for the COE alone, when operated through a direct digital interface. Systems operated with a (VF) line circuit interface may introduce up to 3 dB insertion loss. Reference §1755.522(q)(3).

8.20 **Detailed Requirements for Direct Digital Connections**

8.20.1 This paragraph covers the detailed requirements for the provision of interface units which will permit direct digital connection between the host central office and line concentrator subscriber terminals over digital facilities. The digital transmission system shall be compatible with T1 type span lines using a DS1 interface and other digital interfaces that may be specified by the owner. The RUS specification for the T1 span line equipment is PE-60. Other span line techniques may also be used. Diverse span line routing may be used when specified by the owner.

8.20.2 The output of a digital-to-digital port shall be Pulse Code Modulation (PCM), encoded in eight-bit words using the mu-255 encoding law and D3 encoding format, and arranged to interface with a T1 span line.

8.20.3 Signaling shall be by means of Multifrequency (MF) or Dual Pulsing (DP) and the system which is inherent in the A and B bits of the D3 format. In the case where A and B bits are not used for signaling or system control, these bits shall only be used for normal voice and data transmission.

8.20.4 When a direct digital interface between the span line and the host central office equipment is to be implemented, the following requirements shall be met:

8.20.4.1 The span line shall be terminated in a central office as a minimum a DS1 (1.544Mb/s) shall be provided.

8.20.4.2 The digital central office equipment shall be programmed to support the operation of the digital port with the line concentrator subscriber terminal.

8.20.4.3 The line concentrator subscriber terminal used with a direct digital interface shall be interchangeable with the subscriber terminal used with a central office terminal.

9. ALARMS

9.1 The system shall send alarms for such conditions as blown fuses, blocked controls, power failure in the remote terminal, etc., along with its own status indication and status of dry relay contact closures or solid-state equivalent to the associated central office alarm circuits. Sufficient system alarm points shall be provided from the remote terminal to report conditions to the central office alarm system. The alarms shall be transmitted from the remote terminal to the central office terminal as long as any part of the connecting link is available for this transmission. Fuses shall be of the alarm and indicator type, and their rating designated by numerals or color code on fuse positions.

10. ELECTRICAL PROTECTION

10.1 Surge Protection

10.1.1 Adequate electrical protection of line concentrator equipment shall be included in the design of the system. The characteristics and application of protection devices must be such that they enable the line concentrator equipment to withstand, without damage or excessive protector maintenance, the dielectric stresses and currents that are produced in line-to-ground and tip-to-ring circuits through the equipment as a result of induced or conducted lightning or power system fault-related surges. All wire terminals connected to outside plant wire or cable pairs shall be protected from voltage and current surges.

10.1.2 Equipment must pass laboratory tests, simulating a hostile electrical environment, before being placed in the field for the purpose of obtaining field experience. For acceptance consideration RUS requires manufacturers to submit recently completed results (within 90 days of submittal) of data obtained from the prescribed testing. Manufacturers are expected to detail how data and tests were conducted. There are five basic types of laboratory tests which must be applied to exposed terminals in an effort to determine if the equipment will survive. Figure 2 of this bulletin, Summary of Electrical Requirements and Tests, identifies the tests and their application.

10.1.3 Electrical protection requirements for line concentrator equipment can be summarized briefly as follows:

10.1.3.1 Current surge tests simulate the stress to which a relatively low impedance path may be subjected before main frame protectors break down. Paths with a 100 Hz impedance of 50 ohms or less shall be subjected to current surges, employing a 10 x 1000 microsecond waveshape as defined in Figure 3 of this bulletin, Surge Waveshape. For the purpose of determining this impedance, arresters which are mounted within the equipment are to be considered zero impedance. The crest current shall not exceed 500A; however, depending on the impedance of the test specimen this value of current may be lower. The crest current through the sample, multiplied by the sample's 100 Hz impedance, shall not exceed 1000 V. Where sample impedance is less than 2 ohms, peak current shall be limited to 500A as shown in Figure 4 of this bulletin, Current Surge Tests.

10.1.3.2 Sixty Hertz (60 Hz) current carrying tests shall be applied to simulate an ac power fault which is conducted to the unit over the cable pairs. The test shall be limited to 10 amperes Root Mean Square (rms) of 60 Hz ac for a period of 11 cycles (0.1835 seconds) and shall be applied longitudinally from line to ground.

10.1.3.3 AC power service surge voltage tests shall be applied to the power input terminals of ac powered devices to simulate switching surges or lightning-induced transients on the ac power system. The test shall employ a 1.2 x 50 microsecond waveshape with a crest voltage of 2500 V. Communications line protectors may be left in place for these tests.

Figure 2

Summary of Electrical Requirements and Tests

Test	Application Criteria	Peak Voltage or Current	Surge Waveshape	No. of Applications & Max. Time Between	Comments
Current Surge	Low Impedance Paths Exposed to Surges	500A or Lesser Current (See Fig. 4)	10x1000 μs	5 each Polarity at 1 minute intervals	None
60 Hz Current Carrying	High or Low Impedance Paths Exposed to Surges	10A rms or Lesser Current (See Fig. 6)	11 Cycles of 60 Hz (0.183 Sec.)	3 each at 1 minute intervals	None
AC Power Service Surge Voltage	AC Power Service Connection	2500V or +3 σ clamping V of arrester employed at 10kV/μs	1.2x50 μs	5 each Polarity at 1 minute intervals	AC arrester, if used, must be removed. Communications line arresters, if used, remain in place.
Voltage Surge	High Impedance Paths Exposed to Surges	1000V or +3 σ dc breakdown of arrester employed	10x1000 μs	5 each Polarity at 1 minute intervals	All primary arresters, if used, must be removed.
Arrester Response Delay	Paths protected by arresters, such as gas tubes, with breakdown dependent on V. rate of rise.	+3 σ breakdown of arrester employed at 100V/μs of rise	100V/μs rise decay to 1/2 V. in tube's delay time	5 each Polarity at 1 minute intervals	All primary arrestors, if used, must be removed.

Figure 3

Explanation of Surge Waveshape

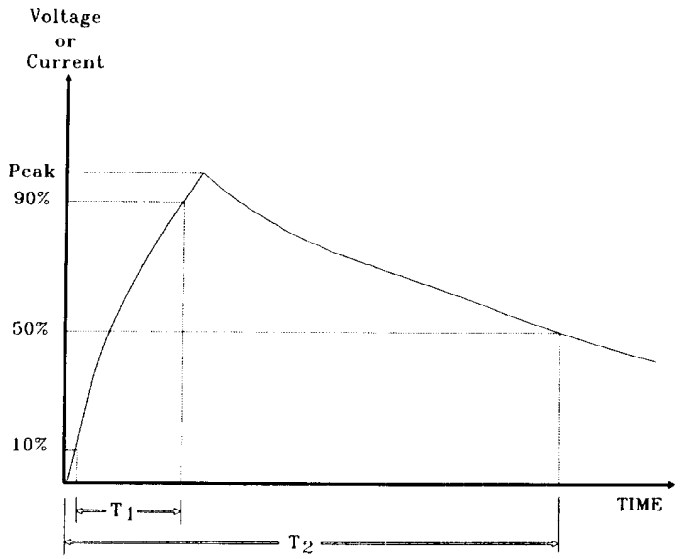

Surge Waveshape is defined as follows:

Rise Time x Time to Decay to Half Crest Value
(For example, 10 x 1000 μs)

Notes: T_1 = Time to determine the rate of rise. The rate of rise is determined as the slope between 10% and 90% of peak voltage or current.

T_2 = Time to 50% of peak voltage (decay to half value).

Figure 4

Current Surge Test

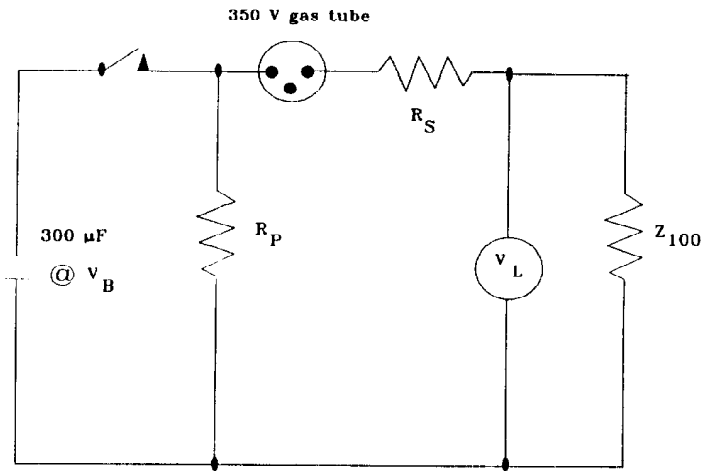

V_L = Not to exceed 1000V
V_B = Charging Voltage
Z_{100} = Test Specimen Impedance to be measured at 100 Hz.
R_P = Parallel Resistance (Waveshape)
R_S = Series Resistance (Current Limiting)

Z_{100}	R_S	R_P	V_B
0	5	∞	2500
1	4	∞	2500
2	3	∞	2500
3	2	∞	1670
4	1	∞	1250
5	0	∞	1000
7.5	0	15	1000
10	0	10	1000
15	0	7.5	1000
20	0	6.7	1000
25	0	6.25	1000
30	0	6	1000
40	0	5.7	1000
50	0	5.5	1000

10.1.3.4 Voltage surge tests which simulate the voltage stress to which a relatively high impedance path may be subjected before primary protectors break down and protect the circuit. To ensure coordination with the primary protection while reducing testing to the minimum, voltage surge tests shall be conducted at a 1000 volts with primary arresters removed for devices protected by carbon blocks, or the +3 sigma dc breakdown voltage of other primary arresters. Surge waveshape should be 10 x 1000 microseconds.

10.1.3.5 Arrester response delay tests are designed to stress the equipment in a manner similar to that caused by the delayed breakdown of gap type arresters when subjected to rapidly rising voltages. Arresters shall be removed for these tests, the peak surge voltage shall be the +3 sigma breakdown voltage of the arrester in question on a voltage rising at 100 V per microsecond, and the time for the surge to decay to half voltage shall equal at least the delay time of the tube as explained in Figure 5 of this bulletin, Arrester Response Delay Time.

10.1.4 Tests shall be conducted in the following sequence. As not all tests are required in every application, non-applicable tests should be omitted:

10.1.4.1 Current Impulse Test;

10.1.4.2 Sixty Hertz (60 Hz) Current Carrying Tests;

10.1.4.3 AC Power Service Impulse Voltage Test;

10.1.4.4 Voltage Impulse Test; and

10.1.4.5 Arrester Response Delay Time Test.

10.1.5 A minimum of five applications of each polarity for the surge tests and three for the 60 Hz Current Carrying Tests are the minimum required. All tests shall be conducted with not more than 1 minute between consecutive applications in each series of three or five applications to a specific configuration so that heating effects will be cumulative. See Figure 6 of this bulletin, 60 Hz Current Surge Tests.

10.1.6 Tests shall be applied between each of the following terminal combinations for all line operating conditions:

10.1.6.1 Line tip to ring;

10.1.6.2 Line ring to ground;

10.1.6.3 Line tip to ground; and

10.1.6.4 Line tip and ring tied together to ground.

Figure 5

Explanation of Arrester Response Delay Time

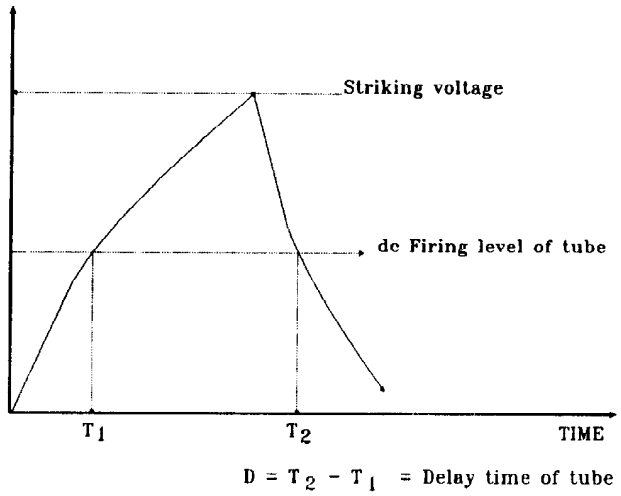

Note: The delay time is that period of time when the potential across an arrester exceeds its dc firing level.

Figure 6

60 Hz Current Surge Test

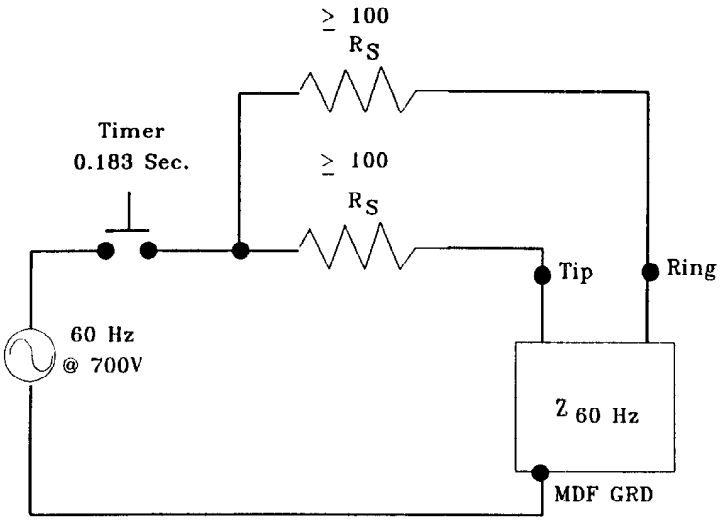

V - 700 Volts root mean square (rms) (Approximately 1000V Peak).
Z_{60} - Test specimen impedance to be measured at 60 Hz.
R_S - Series Resistance (current limiting) in each side of line. (Source impedance never less than 50Ω longitudinal.)

$Z_{60\ Hz}$	R_S
0	140
10	120
20	100
50	100
Over 50	100

10.2 Dielectric Strength

10.2.1 Arresters shall be removed for all dielectric strength tests.

10.2.2 Direct current potentials shall be applied between all line terminals and the equipment chassis and between these terminals and grounded equipment housings in all instances where the circuitry is dc open circuit from the chassis, or connected to the chassis through a capacitor. The duration of all dielectric strength tests shall be at least 1 second. The applied potential shall be at a minimum equal to the plus 3 sigma dc breakdown voltage of the arrester, provided by the line concentrator manufacturer.

10.3 Insulation Resistance: Following the dielectric tests, the insulation resistance of the installed electrical circuits between wires and ground, with the normal equipment grounds removed, shall not be less than 10 megohms at 500 volts dc at a temperature of 68°F (20°C) and at a relative humidity of approximately 50 percent. The measurement shall be made after the meter stabilizes, unless the requirement is met sooner. Arresters shall be removed for these tests.

10.4 Self-protection

10.4.1 All components shall be capable of being continuously energized at rated voltage without injury. Design precautions must be taken to prevent damage to other equipment components when a particular component fails.

10.4.2 Printed circuit boards or similar equipment employing electronic components should be self-protecting against external grounds applied to the connector terminals. Board components and coatings applied to finished products shall be of such material or so treated that they will not support combustion.

10.4.3 Every precaution shall be taken to protect electrostatically sensitive components from damage during handling. This shall include written instructions and recommendations.

11. MISCELLANEOUS

11.1 Interconnect Wire: All interconnect wire shall be of soft annealed tinned copper wire meeting the requirements of ASTM Specification B33-91 and of suitable cross-section to provide safe current carrying capacity and mechanical strength. The insulation of installed wire, connected to its equipment and frames, shall be capable of withstanding the same insulation resistance and dielectric strength requirements as given in

paragraphs 10.2 and 10.3 of this bulletin at a temperature of 120°F (49°C), and a relative humidity of 90 percent.

11.2 **Wire Wrapped Terminals:** These terminals are preferred and where used shall be of a material suitable for wire wrapping. The connections to them shall be made with a wire wrapping tool with the following minimum number of successive non-overlapping turns of bare tinned copper wire in contact with each terminal:

11.2.1 6 turns of 30 gauge;

11.2.2 6 turns of 26 gauge;

11.2.3 6 turns of 24 gauge; or

11.2.4 5 turns of 22 gauge.

11.3 **Protection Against Corrosion:** All metal parts of equipment frames, distributing frames, cable supporting framework and other exposed metal parts shall be constructed of corrosion resistant materials or materials plated or painted to render them adequately corrosion resistant.

11.4 **Screws and Bolts:** Screw threads for all threaded securing devices shall be of American National Standard form in accordance with Federal Standard H28, unless exceptions are granted to the manufacturer of the switching equipment. All bolts, nuts, screws, and washers shall be of nickel-copper alloy, steel, brass or bronze.

11.5 **Environmental Requirements:**

11.5.1 The bidder shall specify the environmental conditions necessary for safe storage and satisfactory operation of the equipment being bid. If requested, the bidder shall assist the owner in planning how to provide the necessary environment for the equipment.

11.5.2 To the extent practicable, the following temperature range objectives shall be met:

11.5.2.1 For equipment mounted in central office and subscriber buildings, the carrier equipment shall operate satisfactory within an ambient temperature range of 32°F to 120°F (0°C to 49°C) and at 80 percent relative humidity between 50°F and 100°F (10°C and 38°C).

11.5.2.2 Equipment mounted outdoors in normal operation (with cabinet doors closed) shall operate satisfactorily within an ambient temperature range (external to cabinet) of -40°F to 140°F (-40°C to 60°C) and at 95 percent relative humidity between 50°F to 100°F (10°C to 38°C). As an alternative to the (60°C) requirement, a maximum ambient temperature of 120°F (49°C) with

equipment (cabinet) exposed to direct sunlight may be substituted.

11.6 Stenciling: Equipment units and terminal jacks shall be adequately designated and numbered. They shall be stenciled so that identification of equipment units and leads for testing or traffic analysis can be made without unnecessary reference to prints or descriptive literature.

11.7 Quantity of Equipment Bays: Consistent with system arrangements and ease of maintenance, space shall be provided on the floor plan for an orderly layout of future equipment bays. Readily accessible terminals will be provided for connection to interbay and frame cables to future bays. All cables, interbay and intrabay (excluding power), if technically feasible, shall be terminated at both ends by connectors.

11.8 Radio and Television Interference: Measures shall be employed by the bidders to limit the radiation of radio frequencies generated by the equipment so as not to interfere with radio, television receivers, or other sensitive equipment.

11.9 Housing

11.9.1 When housed in a building supplied by the owner, a complete floor plan including ceiling height, floor loading, power outlets, cable entrances, equipment entry and travel, type of construction, and other pertinent information shall be supplied.

11.9.2 In order to limit corrosion, all metal parts of the housing and mounting frames shall be constructed of suitable corrosion resistant materials or materials protectively coated to render them adequately resistant to corrosion under the climatic and atmospheric conditions existing in the area in which the housing is to be installed.

11.10 Distributing Frame

11.10.1 The line concentrator terminal equipment located at the central office shall be protected by the central office main distribution frame. The bidder may supply additional protection capability as appropriate. All protection devices (new or existing) shall be arranged to operate in a coordinated manner to protect equipment, limit surge currents, and protect personnel.

11.10.2 The distributing frame shall provide terminals for terminating all incoming cable pairs. Arresters shall be provided for all incoming cable pairs, or for a smaller number of pairs if specified.

11.10.3 The current carrying capacity of each arrester and its associated mounting shall coordinate with a #22 gauge copper

conductor without causing a self-sustaining fire or permanently damaging other arrester positions. Where all cable pairs entering the housing are #24 gauge or finer, the arresters and mountings need only coordinate with #24 gauge cable conductors.

11.10.4 Remote terminal protectors may be mounted and arranged so that outside cable pairs may be terminated on the left or bottom side of protectors (when facing the vertical side of the MDF) or on the back surface of the protectors. Means for easy identification of pairs shall be provided.

11.10.5 Protectors shall have a "dead front" (either insulated or grounded) where live metal parts are not readily accessible.

11.10.6 Protectors shall be provided with an accessible terminal of each incoming conductor which is suitable for the attachment of a temporary test lead. They shall also be constructed so that auxiliary test fixtures may be applied to open and test the subscriber's circuit in either direction. Terminals shall be suitable for wire wrapped connections or connectorized.

11.10.7 If specified, each protector group shall be furnished with a factory assembled tip cable for splicing to the outside cable; the tip cable shall be 20 feet (6.1 m) in length, unless otherwise specified. Tip cable used shall be RUS accepted.

11.10.8 Protector makes and types used shall be RUS accepted.

12. POWER EQUIPMENT

12.1 **General:** When specified, batteries and charging equipment shall be supplied for the remote terminal of the line concentrator.

12.2 Operating Voltage

12.2.1 The nominal operating voltage of the central office and remote terminal shall be 48 volts dc, provided by a battery with the positive side tied to system ground.

12.2.2 Where equipment is dc powered, it must operate satisfactorily over a range of 50 volts ± 6 volts dc.

12.2.3 Where equipment is ac powered, it must operate satisfactorily over a range of 120 ± 10 volts or 220 ± 10 volts ac.

12.3 Batteries

12.3.1 Unless otherwise specified by the owner, sealed batteries shall be supplied for the remote line concentrator terminal.

12.3.2 The batteries shall have an ampere hour load capacity of no less than 8 busy hours. When an emergency ac supply source is available, the battery reserve may be reduced to 3 busy hours.

12.3.3 The batteries shall be sealed when they are mounted in the cabinet with the concentrator equipment.

12.3.4 When specified by th owner, battery heaters shall be supplied in a bidder-furnished housing.

12.4 Charging Equipment

12.4.1 One charger capable of carrying the full dc power load of the remote terminal shall be supplied unless otherwise specified by the owner.

12.4.2 Charging shall be on a full float basis. The rectifiers shall be of the full wave, self-regulating, constant voltage, solid-state type and shall be capable of being turned on and off manually.

12.4.3 When charging batteries, the voltage at the battery terminals shall be adjustable and shall be set at the value recommended for the particular battery being charged, provided it is not above the maximum operating voltage of the central office switching equipment. The voltage shall not vary more than ± 0.02 volt dc per cell between 10% load and 100% load. Between 3% and 10% load, the output voltage shall not vary more than ± 0.04 volt dc per cell. Beyond full load current the output voltage shall drop sharply. The above output voltage shall be maintained with input line voltage variations of plus or minus 10 percent. Provision shall be made to manually change the output voltage of the rectifier to 2.25 volts per cell to provide an equalization charge on the battery.

12.4.4 The charger noise, when measured with a suitable noise measuring set and under the rated battery capacitance and load conditions, shall not exceed 22 dBrnC. See Figure 7 of this bulletin, Charger Noise Test.

12.4.5 The charging equipment shall be provided with a means for indicating a failure of charging current whether due to ac power failure, an internal failure in the charger, or to other circumstances which might cause the output voltage of the charger to drop below the battery voltage. Where a supplementary constant current charger is used, an alarm shall be provided to indicate a failure of the charger.

Figure 7

Charger Noise Test

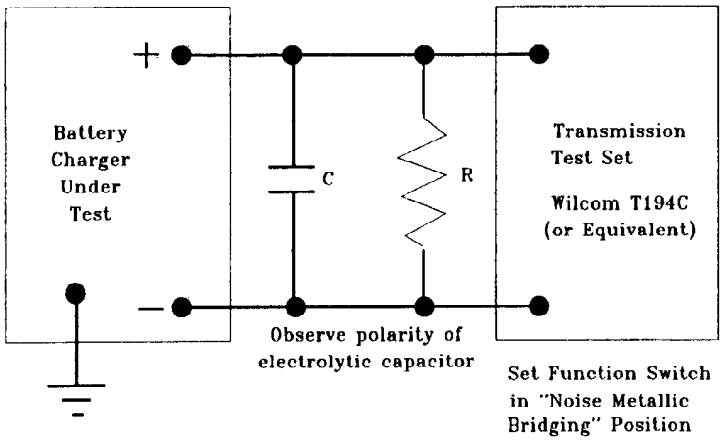

Note (1) The manufacturer may elect to eliminate the capacitor C from the measurement.

Capacitance C in μF = 30,000 μF per ampere-hour per cell. For example, 25 cells at 100 ampere-hour would be equivalent to a capacitance of:

$$(30{,}000 \times 100)/25 = 120{,}000\ \mu F$$

(2) The value of the resistive load R is determined by the nominal battery voltage in volts divided by the full load rating in amperes. For example, for a 48 volt battery and a full load current of 24 amperes, the load resistance R is 48/24 = 2 ohms of appropriate power handling capacity.

12.4.6 Audible noise developed by the charging equipment shall be kept to a minimum. Acoustic noise resulting from operation of the rectifier shall be expressed in terms of dB indicated on a sound level meter conforming to American National Standards Institute S1.4, and shall not exceed 65 dB (A-weighting) measured at any point 5 feet (1.5m) from any vertical surface of the rectifier.

12.4.7 The charging equipment shall be designed so that neither the charger nor the central office equipment is subject to damage in case the battery circuit is opened for any value of load within the normal limits.

12.5 **Power panel**

12.5.1 Battery and charger control switches, dc voltmeters, dc ammeters, fuses and circuit breakers, supervisory and timer circuits shall be provided as required. Portable or panel mounted frequency meters or voltmeters shall be provided as specified by the owner.

12.5.2 Power panels, cabinets and shelves, and associated wiring shall be designed initially to handle the line concentrator terminal when it reaches its ultimate capacity as specified by the owner.

12.5.3 The power panel shall be of the "dead front" type.

12.6 **Ringing Equipment:** The ringing system shall provide sufficient ringing on a bridged basis over the voltage and temperature limits of this bulletin and over subscriber drops within the limits stated by the bidder. The ringing system shall be without operational problems such as bell tapping during dialing. The bidder shall state the minimum number (not less than two) of main station ringers that can be used for each ringing option available.

12.7 **Interrupter Equipment:** The interrupter may be an integral part of the system or may be part of the associated central office equipment connected to the line concentrator central office terminal.

12.8 **Special Systems:** Manufacturers of LC systems that operate by extending ringing current from the central office shall state their required input ringing (voltage and frequency) and the limitations on the connected subscriber loop.

13. FUSING REQUIREMENTS

13.1 General

13.1.1 The equipment shall be completely wired and equipped with fuses, trouble signals, and all associated equipment for the wire capacity of the frames or cabinets provided.

13.1.2 Design precautions shall be taken to prevent the possibility of equipment damage arising from the insertion of an electronic package into the wrong connector or the removal of a package from any connector or improper insertion of the correct card in its connector.

13.2 **Fuses:** Fuses and circuit breakers shall be of an alarm and indicator type, except where the fuse or breaker location is indicated on the alarm printout. Their rating shall be designated by numerals or color codes on the fuse or the panel.

14. TROUBLE LOCATION AND TEST

14.1 Equipment

14.1.1 Trouble indications in the system may be displayed in the form of lights on the equipment units or printed circuit boards.

14.1.2 When required, a jack or other connector shall be provided to connect a fault or trouble recorder (printer or display).

14.2 Maintenance System

14.2.1 The maintenance system shall monitor and maintain the system operation without interruption of call processing except for major failures.

14.2.2 The maintenance system shall be arranged to provide the ability to determine trouble to an individual card, functional group of cards, or other equipment unit.

15. SPARE PARTS

15.1 Lists of spare parts and maintenance tools as recommended by the bidder shall be provided. The cost of such tools and spare parts shall be indicated and shall not be included in the base price.

16. DRAWINGS AND PRINTED MATERIAL

16.1 The bidder shall supply instructional material for each line concentrator system involved at the time of delivery of the equipment. It is not the intent of this bulletin to require system documentation necessary for the repair of individual circuit boards.

16.2 Three complete sets of legible drawings shall be provided for each central office to be accessed. Each set shall include all of the following:

16.2.1 Drawings of major equipment items such as frames, with the location of major component items of equipment shown therein.

16.2.2 Wiring diagrams indicating the specific method of wiring used on each item of equipment and interconnection wiring between items of equipment;

16.2.3 Maintenace drawings covering each equipment item that contains replaceable parts, appropriately identifying each part by name and part number; and

16.2.4 Job drawings including all drawings that are individual to the particular line concentrator involved such as mainframe, power equipment, etc.

16.3 The following information shall also be furnished:

16.3.1 A complete index of required drawings;

16.3.2 An explanation of electrical principles of operation of overall concentrator system;

16.3.3 A list of tests which can be made with each piece of test equipment furnished and an explanation of the method of making each test;

16.3.4 A sample of each form recommended for use in keeping records;

16.3.5 The criteria for analyzing results of tests and determining appropriate corrective action;

16.3.6 A set of general notes on methods of isolating equipment faults to specific printed circuit cards in the equipment;

16.3.7 A list of typical troubles which might be encountered, together with general indications as to probable location of each trouble; and

16.3.8 All special line concentrator system grounding requirements.

16.4 When installation is to be done by the bidder a complete set of drawings shall be provided by the owner, such as floor plans, lighting, grounding and AC power access.

United States
Department of
Agriculture

Rural
Utilities
Service

RUS Bulletin
1753E-004

September 1995

RUS Performance Specification for Line Concentrators, RUS Form 397g

Part II

Installation &
Acceptance

The information and recordkeeping requirements contained in this bulletin have been approved by OMB under control number 0572-0059.

PART II

INSTALLATION AND ACCEPTANCE

1. INSTALLATION AND ACCEPTANCE

1.1 **General:** Paragraphs 17.2.1 through 17.3.21 of this bulletin covers the general requirements for the installation of line concentrator equipment by the bidder, and outlines the general conditions to be met by the owner in connection with such installation work. The responsibilities apply in both the central office installation and remote terminal installations, unless otherwise noted.

1.2 **Responsibilities of Owner:** The owner shall:

1.2.1 Allow the bidder and its employees free access to the premises and facilities at all hours during the progress of the installation;

1.2.2 Provide access to the remote site and any other site for development work needed during the installation;

1.2.3 Take such action as necessary to ensure that the premises are dry and free from dust and in such condition as not to be hazardous to the installation personnel or the material to be installed (not required when remote terminal is not installed in a building);

1.2.4 Provide heat or air conditioning when required and general illumination in rooms in which work is to be performed or materials stored;

1.2.5 Provide suitable openings in buildings to allow material to be placed in position (not required when a remote terminal is not installed in a building);

1.2.6 Provide the necessary conduit and commercial and dc-ac inverter output power to the locations shown on the approved floor plan drawings;

1.2.7 Provide 110 volts a.c., 60 Hz commercial power equipped with a secondary arrester and a reasonable number of outlets for test, maintenance and installation equipment;

1.2.8 Provide suitable openings or channels and ducts for cables and conductors from floor to floor and from room to room;

1.2.9 Provide suitable ground leads, as designated by the bidder (not required when remote terminal is not installed in a building);

1.2.10 Provide the necessary wiring, central office ground and commercial power service, with a secondary arrester, to the location of an exterior remote terminal installation based on the voltage and load requirements furnished voltage and load requirements furnished by the bidder;

1.2.11 Test at the owners expense all lines and trunks for continuity, leakage and loop resistance and ensure that all lines and trunks are suitable for operation with the central office and remote terminal equipment specified;

1.2.12 Make alterations and repairs to buildings necessary for proper installation of material, except to repair damage for which the bidder or its employees are responsible;

1.2.13 Connect outside cable pairs on the distributing frame (those connected to protectors);

1.2.14 Furnish all line, class of service assignment, and party line assignment information to permit bidder to program the data base memory within a reasonable time prior to final testing;

1.2.15 Release for the bidder's use, as soon as possible, such portions of the existing plant as are necessary for the proper completion of such tests as require coordination with existing facilities including facilities for T1 span lines with properly installed repeaters between the central office and the remote terminal installations;

1.2.16 Make prompt inspections as it deems necessary when notified by the bidder that the equipment, or any part thereof, is ready for acceptance;

1.2.17 Provide adequate fire protection apparatus at the remote terminal, including one or more fire extinguishers or fire extinguishing systems of the gaseous type, that has low toxicity and effect on equipment;

1.2.18 Provide necessary access ports for cable, if underfloor cabling is selected;

1.2.19 Install equipment and accessory plant devices mounted external to the central office building and external to the repeater and other outside housings including filters, repeater housings, splicing of repeater cable stubs, externally mounted protective devices and other such accessory devices in accordance with written instructions provided by the bidder; and

1.2.20 Make all cross connections (at the MDF or Intermediate Distribution Frame IDF) between the physical trunk or carrier equipment and the central office equipment unless otherwise specified in Part III of this bulletin.

1.3 **Responsibilities of Bidder:** The bidder shall:

1.3.1 Allow the owner and its representatives access to all parts of the building at all times;

1.3.2 Obtain the owner's permission before proceeding with any work necessitating cutting into or through any part of the building structure such as girders, beams, concrete or tile floors, partitions or ceilings (does not apply to the installation of lag screws, expansion bolts, and similar devices used for fastening equipment to floors, columns, walls, and ceilings);

1.3.3 Be responsible for and repair all damage to the building due to carelessness of the bidder's workforce, exercise reasonable care to avoid any damage to the owner's switching equipment or other property, and report to the owner any damage to the building which may exist or may occur during its occupancy of the building;

1.3.4 Consult with the owner before cutting into or through any part of the building structure in all cases where the fireproofing or moisture proofing may be impaired;

1.3.5 Take necessary steps to ensure that all fire fighting apparatus is accessible at all times and all flammable materials are kept in suitable places outside the building;

1.3.6 Not use gasoline, benzene, alcohol, naphtha, carbon tetrachloride or turpentine for cleaning any part of the equipment;

1.3.7 Be responsible for delivering the CO and remote terminal equipment to the sites where they will be needed;

1.3.8 Install the equipment in accordance with the specifications for the line concentrator;

1.3.9 Have all leads brought out to terminal blocks on the MDF (or IDF if stated in Part III of this bulletin) and have all terminal blocks identified and permanently labeled;

1.3.10 Use separate shielded type leads grounded at one end only unless otherwise specified by the owner or bidder or tip cables meeting RUS cable crosstalk requirements for carrier frequencies inside the central office;

1.3.11 Group the cables to separate carrier frequency, voice frequency, signaling, and power leads;

1.3.12 Make the necessary power and ground connections (location as shown in Part III of this bulletin) to the purchaser's power terminals and ground bus unless otherwise stated in Part III of

this bulletin (ground wire shall be 6 AWG unless otherwise stated);

1.3.13 Place the battery in service in compliance with the recommendations of the battery manufacturer;

1.3.14 Make final charger adjustments using the manufacturer's recommended procedure;

1.3.15 Run all jumpers, except line and trunk jumpers (those connected to protectors) unless otherwise specified in Part III of this bulletin;

1.3.16 Establish and update all data base memories with subscriber information as supplied by the owner until an agreed turnover time;

1.3.17 Give the owner notice of completion of the installation at least one week prior to completion;

1.3.18 Permit the owner or its representative to conduct tests and inspections after installation has been completed in order that the owner may be assured the requirements for installation are met;

1.3.19 Allow access, before turnover, by the owner or its representative, upon request, to the test equipment which is to be turned over as a part of the delivered equipment, to permit the checking of the circuit features which are being tested and to permit the checking of the amount of connected equipment to which the test circuits have access;

1.3.20 Notify the owner promptly of the completion of work of the central office terminals, remote terminals or such portions thereof as are ready for inspection; and

1.3.21 Correct promptly all defects for which the bidder is responsible.

1.4 **Information to be Furnished by Bidder:** The bidder shall accompany its bid with the following information:

1.4.1 Two copies of the equipment list and the traffic calculations from which the quantities in the equipment list are determined;

1.4.2 Two copies of the traffic tables from which the quantities are determined, if other than the Erlang B traffic tables;

1.4.3 A block diagram of the line concentrator and associated maintenance equipment will be provided.

1.4.4 A prescribed method and criteria for acceptance of the completed line concentrator which will be subject to review.

1.4.5 This special grounding requirements including the recommended configuration, suggested equipment and installation methods to be used to accomplish them;

1.4.6 The special handling and equipment requirements to avoid damage resulting from the discharge of static electricity (see paragraph 10.4.3 of Part I of this bulletin) or mechanical damage during transit installation and testing;

1.4.7 The location of technical assistance service, its availability and conditions for owner use and charges for the service by the bidder; and

1.4.8 The identification of the subscriber loop limits available beyond the line concentrator.

1.5 Installation Requirements

1.5.1 All work shall be done in a neat, workmanlike manner. Equipment frames or cabinets shall be correctly located, carefully aligned, anchored, and firmly braced. Cables shall be carefully laid with sufficient radius of curvature and protected at corners and bends to ensure against damage from handling or vibration. Exterior cabinet installations for remote terminals shall be made in a permanent, eye-pleasing manner.

1.5.2 All multiple and associated wiring shall be continuous, free from crosses, reverses, and grounds and shall be correctly wired at all points.

1.5.3 An inspection shall be made by the owner or its representatives prior to performing operational and performance tests on the equipment, but after all installing operations which might disturb apparatus adjustments have been completed. The inspection shall be of such character and extent as to disclose with reasonable certainty any unsatisfactory condition of apparatus or equipment. During these inspections, or inspections for apparatus adjustments, or wire connections, or in testing of equipment, a sufficiently detailed examination shall be made throughout the portion of the equipment within which such condition is observed, or is likely to occur, to disclose the full extent of its existence, where any of the following conditions are observed:

1.5.3.1 Apparatus or equipment units failing to compare in quantity and type to that specified for the installation;

1.5.3.2 Apparatus or equipment units damaged or incomplete;

1.5.3.3 Apparatus or equipment affected by rust, corrosion or marred finish; and

1.5.3.4 Other adverse conditions resulting from failure to meet generally accepted standards of good workmanship.

1.6 Operational Tests

1.6.1 Operational tests shall be performed on all circuits and circuit components to ensure their proper functioning in accordance with appropriate explanation of the operation of the circuit.

1.6.2 All equipment shall be tested to ensure proper operation with all components connected in all possible combinations and each line shall be tested for proper ring, ring trip and supervision.

1.6.3 All fuses shall be verified for continuity and correct rating. Alarm indication shall be demonstrated for each equipped fuse position. An already failed fuse compatible with the fuse position may be used.

1.6.4 Each alarm or signal circuit shall be checked for correct operation.

1.6.5 A sufficient quantity of locally originating and incoming calls shall be made to demonstrate the function of the line concentrator including all equipped transmission paths. When intra-link calling is supplied, all intra-link transmission paths shall be demonstrated.

1.7 Acceptance Tests and Data Required

1.7.1 Data shall be supplied to the owner by the bidder in writing as a part of the final documents in closing out the contract as follows:

1.7.1.1 A detailed cross connect drawing of alarm to power board, central office battery to physical trunks or carrier system, wiring options used in terminals, channels, filters, repeaters, etc., marked in the owner's copy of the equipment manual or supplied separately;

1.7.1.2 The measured central office supply voltages applied to the equipment terminals or repeaters at the time the jack and test point readings are made and ac supply voltages where equipment is powered from commercial ac sources;

1.7.1.3 A list of all instruments, including accessories, by manufacturer and type number, used to obtain the data; and

1.7.1.4 The measurements at all jack or test points recommended by the manufacturer, including carrier frequency level measurements at all carrier terminals and repeaters where utilized.

1.7.2 Data in the form of a checklist or other notations shall be supplied showing the results of the operational tests.

1.7.3 The bidder shall furnish to the owner a record of the battery cell or multicell unit voltages measured at the completion of the installation of the switching system before it is placed in commercial service. This is not required at a site where the owner furnishes dc power.

1.8 Joint Inspection Requirements

1.8.1 The bidder shall notify the owner in writing at least one week before the date the complete system will be ready for inspection and tests. A joint inspection shall be made by the bidder and the owner (or owner's engineer) to determine that the equipment installation is acceptable. The inspection shall include physical inspection, a review of acceptance test data, operational tests, and sample measurements.

1.8.1.1 The owner shall review the acceptance test data and compare it to the requirements of this bulletin.

1.8.1.2 Sample measurements shall be made on all systems installed under this contract. Test methods should follow procedures described in Part I of this bulletin.

1.8.1.3 A check shall be made of measured test point and jack readings for compliance with the manufacturer's specifications. This applies also to channels, terminals, carrier frequency repeaters, and fault locating circuits.

1.8.2 In the event that the measured data or operational tests show that equipment fails to meet the requirements of this bulletin, the deficiencies are to be resolved as set forth in Article II of Form 397, Special Equipment Contract. (Copies are available from RUS, Ag Box 1533, US Departmnet of Agriculture, Washington, DC 20250-1533.) The reports of the bidder and the owner shall be detailed as to deficiencies, causes, corrective action necessary, corrective action to be taken, completion time, etc.

United States
Department of
Agriculture

Rural
Utilities
Service

RUS Bulletin
1753E-004

September 1995

RUS Performance Specification for Line Concentrators, RUS Form 397g

Part III

Specification for Line Concentrator Detailed Equipment Requirements

Any company or organization choosing to generate or otherwise obtain and use electronic media reproductions of Part III of RUS Bulletin 1753E-004 (Form 397g) for the purpose of specifying, furnishing, installing and accepting specific line concentrators should complete the following statement:

REPRODUCTION STATEMENT

_____ certifies that the attached electronically reproduced form is a true reproduction of Part III of RUS Bulletin 1753E-004 (Form 397g), dated September 1995, from which it was derived and understands that in case of discrepancies the regulation at 7 CFR 1755 section 1755.397 is the authorized source.

The information and recordkeeping requirements contained in this bulletin have been approved by OMB under control number 0572-0059.

PART III

SPECIFICATION FOR LINE CONCENTRATOR DETAILED EQUIPMENT REQUIREMENTS

(Information to Be Supplied by Owner)

Telephone Company (Owner)

Name: _____

Location: _____

Number of LC's Required: _____

Line Concentrator Locations:

Location	No. of Lines	Central Office

1. GENERAL

1.1 Notwithstanding the bidder's equipment lists, the equipment and materials furnished by the bidder must meet the requirements of Parts I and III of this bulletin.

1.2 Part I of this bulletin covers the minimum general requirements for line concentrator equipment.

1.3 Part II of this bulletin covers the requirements for installation, inspection and testing when such service is included as part of the contract.

1.4 Part III covers the technical data for application engineering and detailed equipment requirements insofar as they can be established by the owner. This part shall be filled in by the owner.

1.5 Part IV of this bulletin covers detailed information on the line concentrator equipment, information on system reliability and traffic capacity as proposed by the bidder. This part is to be filled in by the bidder and must be presented with the bid.

Office Name
(By Location)_____
LC Designation_____

2. NUMBER OF SUBSCRIBER LINES

	Equipped	Wired Only
Single-Party	_____	_____
Pay Station (Type:_____)	_____	_____
Other (Describe:_____)	_____	_____
Total	_____	_____

3. LOOP RESISTANCE

3.1 Number of non-pay station lines having a loop resistance, including the telephone set as follows:

3.1.1 For physical trunks between the remote and the office units, the loop resistance is to include the resistance of the trunk.

	No. of Lines
1200 - 1900 ohms	_____
1901 - 3200 ohms	_____
3201 - 4500 ohms	_____

3.1.2 Number of pay station lines having a loop resistance, excluding the telephone set, greater than:

	No. of Lines
1200 ohms (Prepay)	_____
1000 ohms (Semi-Postpay)	_____

When physical trunks are used, these resistances include that of the facility between the CO and the remote.

3.1.3 Range extension equipment, if required, is to be provided:

____ By Bidder

____ By Owner (Quantity and Type) _____

_____

Office Name
(By Location)_____
LC Designation_____

4. TRAFFIC DATA

4.1 Average combined originating and terminating hundred call seconds (CCS) per line in the busy hour:
_____CCS/Line. (Assume originating & terminating equal.)

4.2 Percent Intra-Calling _____

4.3 Total Busy Hour Calls _____

5. TYPE OF RINGING

5.1 Frequency No. 1. 2. 3. 4.

Frequency (Hz) _____ _____ _____ _____

Max. No. of Phones/Freq. _____ _____ _____ _____

5.2 Minimum ringing generator capacity to be supplied shall be sufficient to serve _____ lines (each frequency).

6. CENTRAL OFFICE EQUIPMENT INTERFACE

6.1 COE will be:

6.1.1 COE Manufacturer _____

Type_____ Year_____ Generic_____

6.1.2 ___ See digital central office specification for the switchboard at _____.

6.2 Interface will be:

6.2.1 ___ Line Circuit(s)

6.2.2 ___ Direct Digital Interface

6.2.3 ___ Other (Describe) _____

_____

_____

Office Name
(By Location)_____
LC Designation_____

6.3 Mounting rack for line concentrator furnished by:

___ Bidder ___ Owner

(Specify width and height of rack available) _____ _____
Width Height

6.4 Equipment to be installed in existing building:

___ Yes (Attach detailed plan) ___ No

7. TRANSMISSION FACILITIES

7.1 Transmission facilities between the central office and remote terminals shall be:

7.1.1 Type:

___ VF Carrier Derived Circuits

___ Digital Span Line (DS1)
___ Other _____

(Attach a layout of the transmission facilities between the central office and the remote terminals describing transmission and signaling parameters, routing and resistance where applicable).

7.1.2 Utilizes physical plant

___ Cable Pairs (Existing/New)

___ Other _____

Note: Unless otherwise stated, physical plant will be supplied by the owner.

7.1.3 Terminal equipment for transmission facility to be supplied by:

___ Owner ___ Bidder

Office Name
(By Location)_____
LC Designation_____

7.1.3.1 Carrier e/w voice terminations ___ Yes ___ No

Manufacturer and type _____

Central office voice terminations
Equipped_____, Wired Only_____

7.1.3.2 Digital span line (DS1) supplied by

___ Owner ___ Bidder
Manufacturer and Type _____

7.1.3.3 Number of repeaters (per span line) _____

7.1.3.4 Diverse (alternate) span line routing required

___ Yes (Describe in Item 11) ___ No

7.1.3.5 Span line terminations only ___ Yes ___ No

7.1.3.6 Span line power required ___ Yes ___ No
(CO and Remote Terminals)

7.1.3.7 Physical facility between CO and remote

Loop Resistance _____ohms, Length _____meters

8. POWER EQUIPMENT REQUIREMENTS

8.1 Central Office Terminal

8.1.1 Owner-furnished -48 volt dc power ___ Yes ___ No

8.1.2 Other (Describe) _____

8.1.3 Standby power is available ___ Yes ___ No

8.2 Remote Terminal

8.2.1 Owner-furnished -48 vdc power ___ Yes ___ No

8.2.2 Bidder-furnished power supply ___ Yes ___ No

8.2.3 AC power available at site:

___ 110 vac, 60 Hz, single-phase

___ Other (Describe in Item 11)

Office Name
(By Location)_____
LC Designation_____

8.2.4 A battery reserve of ____ busy hours shall be provided for this line concentrator terminal when it reaches _____ lines at the traffic rates specified.

8.2.5 Batteries supplied shall be:

___ Lead Calcium

___ Stabilized Electrolyte ___ Sealed Lead Acid

___ Other (Describe in item 11)

8.2.6 Standby power is available ___ Yes ___ No

9. REMOTE TERMINAL

9.1 Mounting

9.1.1 ___ Outside Housing (To be furnished by bidder)

9.1.2 ___ Concrete Slab to be furnished by owner
(Bidder to supply construction details after award.)

9.1.3 ___ Manhole, environmentally controlled (Describe in Item 11)

9.1.4 ___ Pedestal Mounting

9.1.5 ___ Pole Mounting (Owner-furnished installed pole)

9.1.6 ___ Prefab Building (Owner-furnished site)

9.2 Equipment is to be installed in an existing building.

___ Yes ___ No

(Attach detailed plan.)

9.3 Other (Describe) _____
_____

Office Name
(By Location)_____
LC Designation_____

10. ALTERNATES

11. EXPLANATORY NOTES

United States
Department of
Agriculture

Rural
Utilities
Service

RUS Bulletin
1753E-004

September 1995

RUS Performance Specification for Line Concentrators, RUS Form 397g

Part IV

Specification for Line Concentrator Detailed Requirements; Bidder Supplied Information

Any company or organization choosing to generate or otherwise obtain and use electronic media reproductions of Part IV of RUS Bulletin 1753E-004 (Form 397g) for the purpose of specifying, furnishing, installing and accepting specific line concentrators should complete the following statement:

REPRODUCTION STATEMENT

_____ certifies that the attached electronically reproduced form is a true reproduction of Part IV of RUS Bulletin 1753E-004 (Form 397g), dated September 1995, from which it was derived and understands that in case of discrepancies the regulation at 7 CFR 1755 section 1755.397 is the authorized source.

The information and recordkeeping requirements contained in this bulletin have been approved by OMB under control number 0572-0059.

PART IV

SPECIFICATION FOR LINE CONCENTRATORS DETAILED REQUIREMENTS; BIDDER SUPPLIED INFORMATION

Telephone Company (Owner)

Name: _____
Location: _____

Line Concentrator Equipment Locations

Central Office Terminal: _____
Remote Terminal: _____

1. GENERAL

1.1 The equipment and materials furnished by the bidder must meet the requirements of Part I of this bulletin.

1.2 Part I of this bulletin covers the minimum general requirements for line concentrator equipment.

1.3 Part II of this bulletin covers requirements for installation, inspection and testing when such service is included as part of the contract.

1.4 Part III of this bulletin covers the technical data for application engineering and detailed equipment requirements insofar as they can be established by the owner. This part is to be filled in by the owner.

1.5 Part IV covers detailed information on the line concentrator equipment, information as to system reliability and traffic capacity as proposed by the bidder. This part shall be filled in by the bidder and must be presented with the bid.

2. PERFORMANCE OBJECTIVES

2.1 Reliability (See Part I, paragraph 3)

_____
_____
_____
_____

2.2 Busy Hour Load Capacity and Traffic Delay (See Part I, paragraph 7)

_____
_____
_____
_____

3. EQUIPMENT QUANTITIES DEPENDENT ON SYSTEM DESIGN

3.1 Transmission Facilities between the Central Office and Remote Terminals

Type	Quantity Equipped	Quantity Wired Only

4. POWER REQUIREMENTS

4.1 Central Office Terminal

Voltage _____
Current Drain (Amps) Normal _____, Peak _____
Fuse Qty _____, Size _____, Type _____
Heat Dissipation (BTU/Hr.) _____

4.2 Remote Terminal

AC or DC _____
Voltage _____
Current Drain (Amps) Normal _____, Peak _____
Fuse Qty _____, Size _____, Type _____
Heat Dissipation (BTU/Hr.) _____

Power required for heating or cooling equipment in remote bidder-furnished housing _____
_____
_____

5. TEMPERATURE AND HUMIDITY LIMITATIONS

5.1 Temperature

	Central Office	Remote*
Maximum °F (°C)		
Minimum °F (°C)		

*Show conditions outside bidder-furnished housing.

5.2 Relative Humidity

	Central Office	Remote*
Maximum	_____	_____
Minimum	_____	_____

*Show conditions outside bidder-furnished housing.

6. EXPLANATORY NOTES